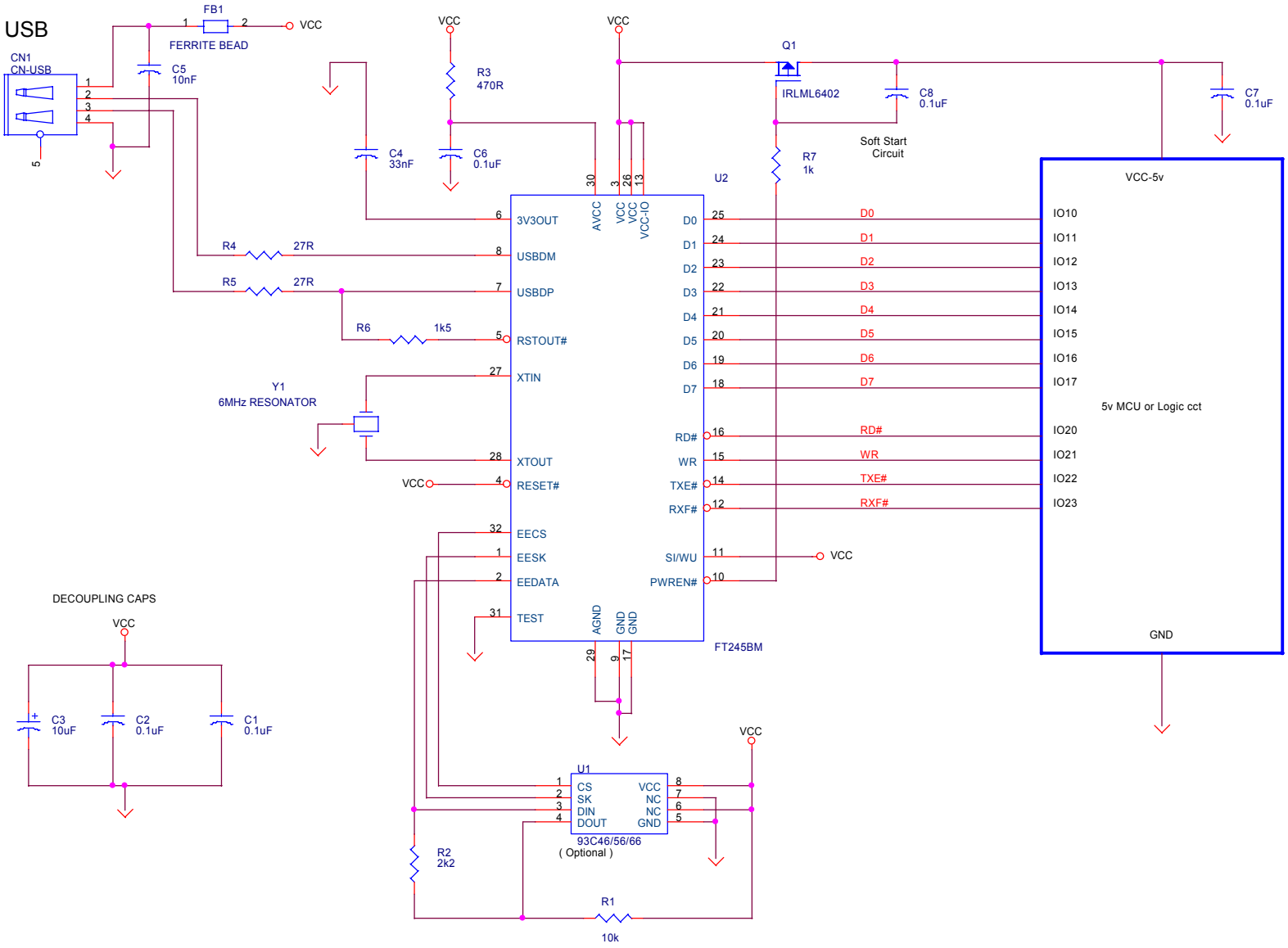

FT245BM 5v BUS POWERED EXAMPLE

WITH POWER SWITCHING