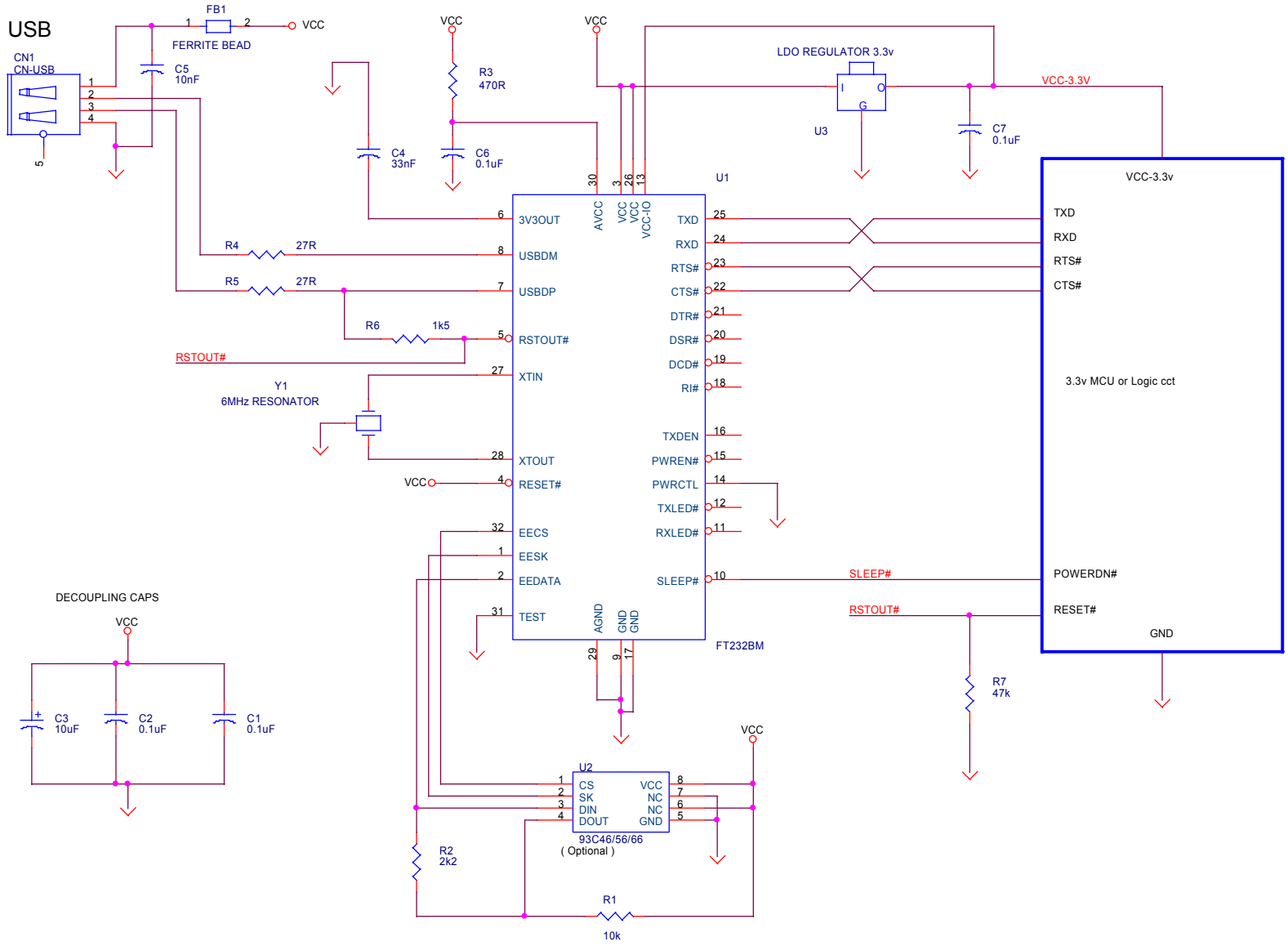

FT232B APPLICATION SCHEMATIC

INTERFACING TO 3.3 V LOGIC - BUS POWERED (<= 100mA) APPLICATION